Automatic CAD Models Comparison and Re-meshing in the Context of Mechanical Design Optimization

Jean-Christophe Cuillière[1], Vincent François[1], Khaled Souaissa[1,2], Abdelmajid Benamara[2], and Hedi BelHadjSalah[2]

[1] ERICCA, Département de Génie Mécanique UQTR, Trois Rivières, Canada
cuillier@uqtr.ca, francois@uqtr.ca
[2] LGM, ENIM, Monastir, Tunisie
abdel.benamara@enim.rnu.tn

Abstract. A lot of research work has been focused on integrating FEA (finite elements analysis) with CAD (Computer Aided Design) over the last decade. In spite of improvements brought by this integration, research work remains to be done in order to better integrate all the operations led during the whole design process. The design process involves several modifications of an initial design solution and until now, in this context, the communication between CAD modules (dedicated to different tasks involved in the product design process) remains static. Consequently, there is a need for more flexible communication processes between CAD modules through the design cycle, if not through the product life cycle. Some approaches have been developed aiming at the reduction of the design process length when using FEA, and aiming at the automation of part's data transfer from one step of the process to the next one. Automatic re-meshing is one of these approaches. It consists in automatically updating the part's mesh around modifications zones, in the case of a minor change in the part's design, without the need to re-mesh the entire part. The purpose of this paper is to present a new tool, aiming at the improvement of automatic re-meshing procedures. This tool basically consists in automatically identifying and locating modifications between two versions of a CAD model (typically an initial design and a modified design) through the design process. The knowledge of these modifications is then used to fit portions of the initial design's mesh to the modified design (a process referred to as automatic re-meshing). A major benefit of the approach presented here is that it is completely independent of the description frame of both models, which is made possible with the use of vector-based geometric representations.

Keywords: Model comparisons/BREP/Vectorial space/Remeshing/ NURBS.

1 Introduction

The design process of mechanical parts, usually involves several modification of an initial design solution. This means that during the design and manufacturing cycle of a given part, the geometry can change several times. When the new version of a part's geometry has to be analyzed using FEA (Finite Element Analysis),

the mesh usually needs to be completely built from scratch and no benefit is made of meshes corresponding with the analysis of previous versions of the design. This is obviously a great waste of time if we consider that a part's geometry changes very little from one design version to the next one. It is even a greater waste of time when analysis requires significant adaptive mesh refinement. In fact, repeating these tasks (mesh generation and adaptive refinement) for every new design alternative makes the design process very expensive with regard to processing time. In order to reduce the time of the design phase in product development, automatic updating of models and processes (such as mesh generation and FEA) could induce very important gains with regard to processing time. For example, instead of re-meshing entirely a modified model, it can be re-meshed only around modification zones, while partially preserving the former mesh. Also, when performing a FEA on a modified design, instead of solving the entire modified model, it would be very powerful to be able to solve the problem only in modifications zones and to retrieve results of previous analyses, in zones where the design has not been modified (Fig. 1).

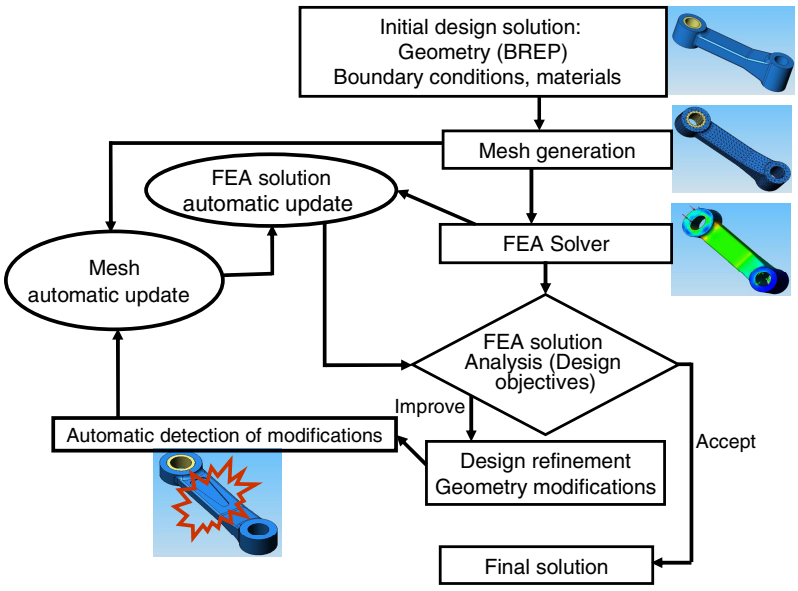

Fig. 1. The iterative FEA process in the context of design optimization

The implementation of these concepts in the context of the design process requires the development of a set of tools, which are (Fig. 1) :

1. A tool aimed at automating the identification and localization of modifications between different versions of a CAD model through the design progress.
2. A tool aimed at automatically retrieving elements from previous versions of a FEA model and only remeshing in modification zones.

3. A FEA solver able to retrieve results of previous analyses in zones where the design has not been modified and to restrict the calculation to modification zones.

This paper focuses on the presentation of our research work towards the development of the two first tools in the list just above.

2 Comparison between CAD Models

The automatic comparison between two versions of a given CAD model through the design process and the retrieval of identical shapes is not really a new subject of interest [1-11]. Nevertheless, it is sill a subject of interest and a subject of research investigations, especially because CAD models are in constant evolution and because this allows for the development of new functionalities and for the improvement of existing functionalities. Also, in the context of designing and storing huge numbers of digital product models, the interest for this type of functionalities is clearly growing. For example, in the aeronautics and automotive industries, where thousands of CAD models for manufactured parts are contained in product databases, being able to easily re-use stored design/manufacturing information would result in a much faster and more efficient design processit is.

Among functionalities mentioned just above, a key aspect is the ability to compare two versions of a CAD model, being fully independent of the frames in which these two versions are defined. In fact, many existing comparison approaches require that these versions are defined with respect to the same frame, which means that they are located and oriented the same way. In the context of our research and in the context of modern feature-based CAD systems, this comparison has to be fully independent from the definition frames of feature-based models.

The main concept underlying our approach is to base comparisons between models on a vector representation of 3D shapes. Basically, a solid geometry is modeled in any CAD system using a spatial type of representation, referred to as a BREP (Boundary REPresentation) [12]. This spatial representation is fundamentally based on the location of geometric entities (vertices, control points, curves, surfaces, etc.). As described in the next section, in our work, this BREP is added with vector representations of 3D shapes (the vectorial space, the metric tensor and the initia tensor) [11, 13-15]. Indeed, a very interesting property of these vector-based representations is that they can be derived into frame-independent quantities. Consequently, they provide us with meaningful data on which comparisons can be made independently from any definition frame.

2.1 Vectorial Space, Metric Tensor and Initia Tensor

The definition of the *vectorial space* of BREP entities (for example, curves and surfaces) is based on a point cloud, which is directly derived from the BREP entity control points associated with their NURBS (NonUniform Rational B-Splines) description [16]. The vectorial space is computed from this point cloud as a vector sheaf where each vector is defined by a pair of control points. The coordinates of

control points (and incidentally, the components of vectors derived) are defined in a 4D space. The fourth coordinate of a given control point corresponds to the weight associated with it in its NURBS representation. If the native BREP entity is not a NURBS then equivalent NURBS parameters can be obtain from most CAD system. So the vectorial space is defined for every type of BREP entities.

Once these vectors are computed, a corresponding metric tensor is derived. Using the 4D coordinates mentioned earlier, any vector $\vec{V}$ can be written in a unique way as a linear combination of the four basis vectors $B = \left(\vec{e_1}, \vec{e_2}, \vec{e_3}, \vec{e_4}\right)$. The vectorial space of a BREP entity $\overline{\overline{\Gamma}}_\alpha = \left\{\vec{V}_0, \ldots\ldots\ldots, \vec{V}_p\right\}$, which is defined in this basis just above, can be expressed as:

$$\overline{\overline{\Gamma}}_\alpha = \begin{Bmatrix} \vec{V}_0 \\ \vec{V}_1 \\ . \\ . \\ \vec{V}_p \end{Bmatrix} = \begin{bmatrix} V_0^x & V_0^y & V_0^z & V_0^w \\ V_1^x & V_1^y & V_1^z & V_1^w \\ . & . & . & . \\ . & . & . & . \\ V_p^x & V_p^x & V_p^z & V_p^w \end{bmatrix} \begin{Bmatrix} \vec{e}_1 \\ \vec{e}_2 \\ \vec{e}_3 \\ \vec{e}_4 \end{Bmatrix} \tag{1}$$

Then, the metric tensor $\overline{\overline{G}}(\overline{\overline{\Gamma}}_\alpha)$ of this vector's set is defined as the tensor product:

$$\begin{aligned} \overline{\overline{G}}(\overline{\overline{\Gamma}}_\alpha) &= \overline{\overline{\Gamma}}_\alpha \otimes \overline{\overline{\Gamma}}_\alpha = \begin{Bmatrix} \vec{V}_0 \\ \vec{V}_1 \\ . \\ . \\ \vec{V}_p \end{Bmatrix} \otimes \begin{Bmatrix} \vec{V}_0 \\ \vec{V}_1 \\ . \\ . \\ \vec{V}_p \end{Bmatrix} \\ &= \begin{bmatrix} V_0^x & V_0^y & V_0^z & V_0^w \\ V_1^x & V_1^y & V_1^z & V_1^w \\ . & . & . & . \\ . & . & . & . \\ V_p^x & V_p^x & V_p^z & V_p^w \end{bmatrix} . \begin{bmatrix} V_0^x & V_0^y & V_0^z & V_0^w \\ V_1^x & V_1^y & V_1^z & V_1^w \\ . & . & . & . \\ . & . & . & . \\ V_p^x & V_p^x & V_p^z & V_p^w \end{bmatrix}^T \end{aligned} \tag{2}$$

which can be written as:

$$\overline{\overline{G}}(\overline{\overline{\Gamma}}_\alpha) = \overline{\overline{\Gamma}}_\alpha \otimes \overline{\overline{\Gamma}}_\alpha = \begin{bmatrix} \vec{V}_0.\vec{V}_0 & \vec{V}_0.\vec{V}_1 & . & . & \vec{V}_0.\vec{V}_p \\ \vec{V}_1.\vec{V}_0 & \vec{V}_1.\vec{V}_1 & . & . & \vec{V}_1.\vec{V}_p \\ . & . & . & . & . \\ . & . & . & . & . \\ \vec{V}_p.\vec{V}_0 & \vec{V}_p.\vec{V}_1 & . & . & \vec{V}_p.\vec{V}_p \end{bmatrix} \tag{3}$$

The inertia tensor $\overline{\overline{I}}(\Gamma_\alpha)$ of a BREP entity α is defined as the inertia matrix of the entity's set of control points obtained when a unit point mass is attached to each control point:

$$\overline{\overline{I}}(\overline{\overline{\Gamma}}_\alpha) = \begin{bmatrix} \sum_{i=1}^{n} m_i.(y_i^2 + z_i^2 + w_i^2) & -\sum_{i=0}^{n} m_i.x_i.y_i & -\sum_{i=0}^{n} m_i.x_i.z_i & -\sum_{i=0}^{n} m_i.x_i.w_i \\ & \sum_{i=1}^{n} m_i.(x_i^2 + z_i^2 + w_i^2) & -\sum_{i=0}^{n} m_i.y_i.z_i & -\sum_{i=0}^{n} m_i.y_i.w_i \\ & & \sum_{i=1}^{n} m_i.(x_i^2 + y_i^2 + w_i^2) & -\sum_{i=0}^{n} m_i.z_i.w_i \\ (sym) & & & \sum_{i=1}^{n} m_i.(x_i^2 + y_i^2 + z_i^2) \end{bmatrix} \quad (4)$$

2.2 Comparison between CAD Models

The basic idea on which our approach is comparing to CAD models (and by the way identifying differences between them) by comparing metric and inertia tensors associated with entities of the two BREP models.

With regard to the following definitions of *similarity*, *identity* and *localized identity*, this comparison is performed through four consecutive steps (Fig. 2)

Definition 1: Two entities are similar if they have the same shape regardless of their size (Fig. 3a).

Definition 2: Two entities are identical if they are similar and if their dimensions are the same (Fig. 3b).

Definition 3: Two entities are identically localized if they are identical and if their location is the same relative to the same reference face in both models (Fig. 3c).

These four steps are the following:

Step 1: comparisons between metric tensors associated with topologic entities of the two BREPs being compared (typically edges and faces) result in a list of similar topologic entities between the two models.

Step 2: comparisons between the intertia tensors of similar topologic entities result in a list of identical topologic entities between the two models.

Step 3: A local frame is computed for each topologic entity tagged as identical. This local frame is derived from the principal direction vectors of the entity's inertia tensor. Then the coordinates of topologic entities' barycentre are calculated with regard to these local frames and comparisons based on these coordinates result in a list of topologic entities which are identified as localized identical.

Step 4: All the topologic entities of a given model which have not been identified as having a corresponding localized identical topological entity in the other model are tagged as modified.

Once modified topologic entities are identified between the two models, the process ends with the classification of these entities in the following three categories: new entities, erased entities and partially modified entities. This classification

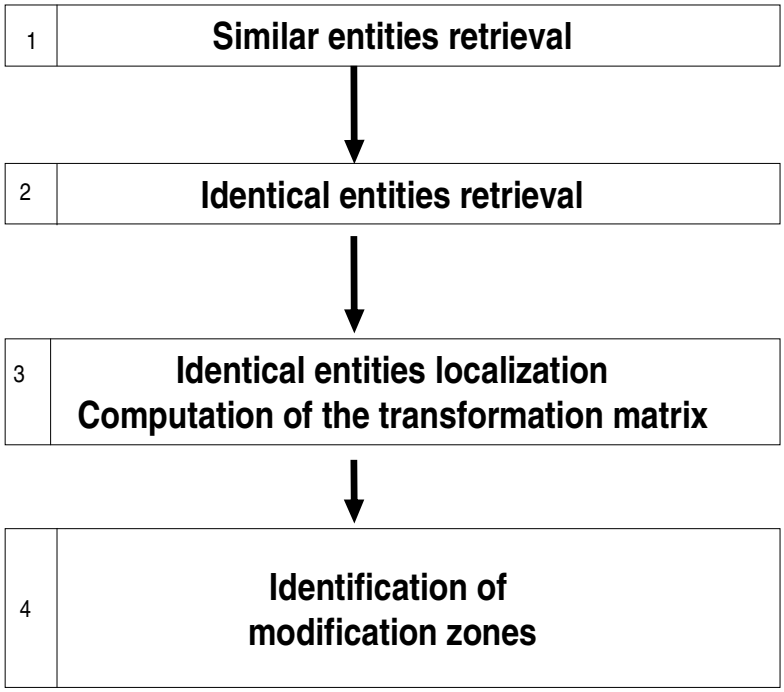

Fig. 2. The general framework of our comparison algorithm

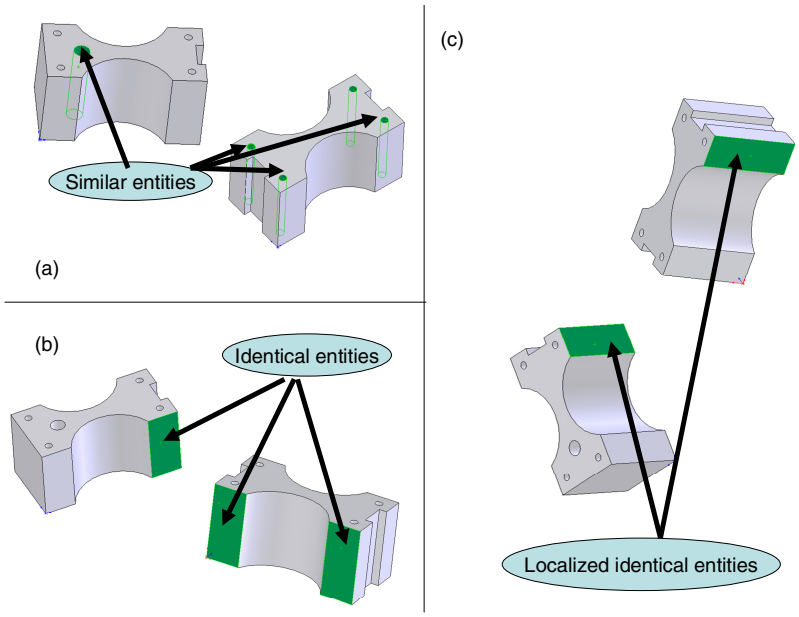

Fig. 3. Three types of relationship between two BREP entities

is basically performed using the same type of concepts as those described earlier (comparisons between metric and inertia tensors, considering local frames and coordinates of barycentres). It important to outline that for entities that are finally identified as partially modified, the modification zones are not explicitly identified at this stage of the process. We will see in the next paragraphs that these modification zones are in fact implicitly identified through the remeshing process itself.

Once these steps are completed and if necessary, the homogeneous transformation matrix between definition frames (expressing the relative position and orientation of the two models' definition frames) can be computed.

Fig. 4 illustrates results obtained applying this approach on two versions of a sample part through the design process.

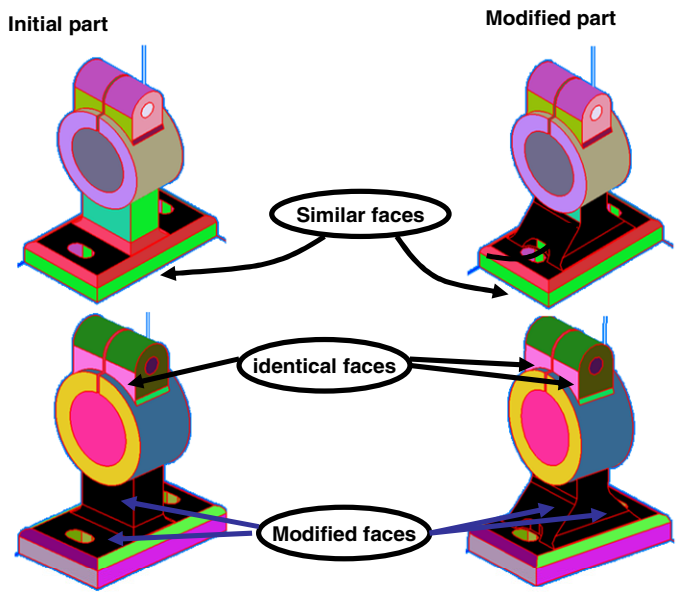

Fig. 4. A comparison result

3 Automatic Remeshing

3.1 Algorithm

The remeshing algorithm used in this study is an adaptation and improvement of a previous version developed by our research team [10, 17, 18]. This adaptation is closely related to the fact that the comparison process itself, has been improved, as described in the previous section.

In this new remeshing process, edges, faces and the volume are processed (namely remeshed) using the same generic scheme. This scheme is based on the following definition of *mesh blocks*.

Definition 4: A mesh block is a continuous subset of mesh elements (segments on edges (1D), triangles on faces (2D), and tetrahedrons inside the volume (3D)), all of which are related to the same topologic entity of the BREP model (respectively an edge, a face or a body).

As mentioned above, modification zones are not explicitly known. The basic principle of the method we are describing here is to define mesh blocks by cutting out the initial mesh. The process starts with one tetrahedron block (the initial mesh).

We have illustrated the various steps of the method using an elementary part (Fig. 5), i.e., a beam with a square section whose length has been decreased and to which grooves have been suppressed.

The steps in the remeshing process are as follows:

1. The initial mesh is applied to the modified model. Two layers of tetrahedrons (the minimum number of layers needed to guarantee the process will work properly and efficiently) are destroyed around entities of the initial model that have disappeared (the second list in the information provided by the comparison algorithms).
2. At this point, some vertices are associated with a mesh node and some are not. A node is created on each vertex to which no node is associated.

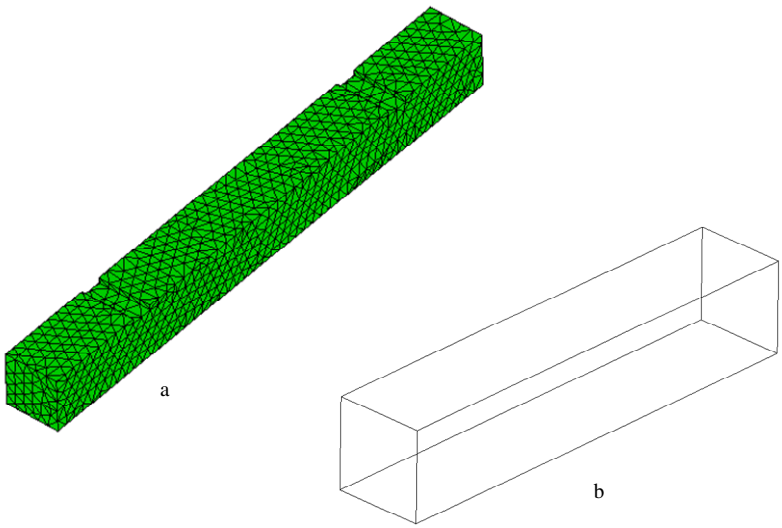

Fig. 5. Remeshing on a simple case a) The mesh of the initial part b) The modified part

3. Tetrahedrons of the initial mesh with a node B closer than a distance L to a node A created at step 2 are destroyed. L is calculated using the equation:

$$L = \max\left[2.E_A, 2.E_B, 4.\left|E_A - 2.E_B\right|\right] \tag{5}$$

Where

E_A is the nodal spacing function value at node A, and

E_B is the nodal spacing function value at node B.

4. 1D mesh blocks (segments) on edges are created (Fig. 6a).
5. As the 3D mesh of the modified part is partially known, each edge of the BREP structure is either without elements, completely meshed or partially meshed. Standard edge discretization procedures must be adapted for partially meshed edges. These edges are cut into sets of sub-edges, so that a sub-edge is either completely meshed or without elements. After this preliminary process, standard edge discretization procedures are applied to mesh sub-edges that remain without elements (Fig. 6b). Once these procedures are complete, all BREP edges are completely meshed (Fig. 6c). Segment blocks that cannot be inserted on edges of the modified model are eliminated.

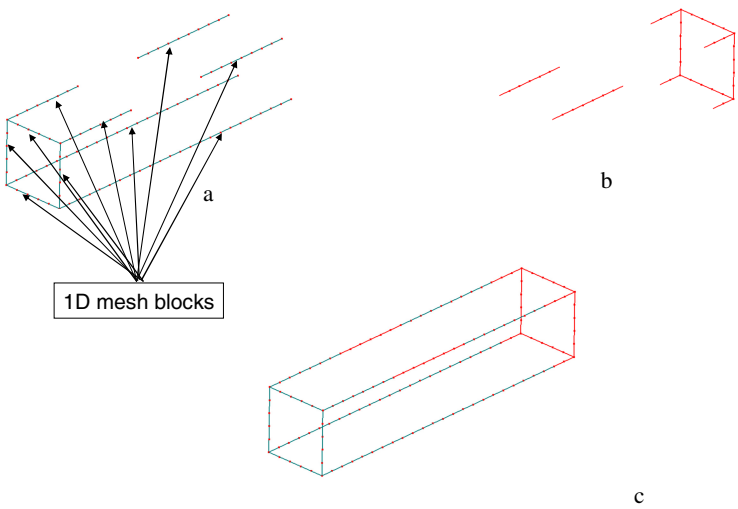

Fig. 6. a) 1D mesh blocks; b) edge mesh processed; c) edge mesh processed with edge mesh recovered

6. Tetrahedrons of the initial mesh with a node located inside a zone defined around segments created at step 5 are destroyed. The shape of this destruction zone is derived from a parabola with height L as defined at step 3 (Fig. 7a). The shape is very specific and has been designed so that a minimum number of tetrahedrons are destroyed and so that the convergence of advancing front automatic mesh generation is guaranteed.

7. 2D mesh blocks (triangles) on faces are created (Fig. 8a).
8. In the BREP structure, a face is either without elements, completely meshed or partially meshed. An adaptation of standard procedures is also necessary for partially meshed faces (Fig. 8b). The initialization front of our advancing front mesh generator is adapted. The front is initialized on the boundaries of triangles belonging to partially meshed faces. The advancing front mesh generator is then used to compute the entire face's mesh (Fig. 8c). Here again, triangle blocks that cannot be inserted on faces of the modified model are eliminated.

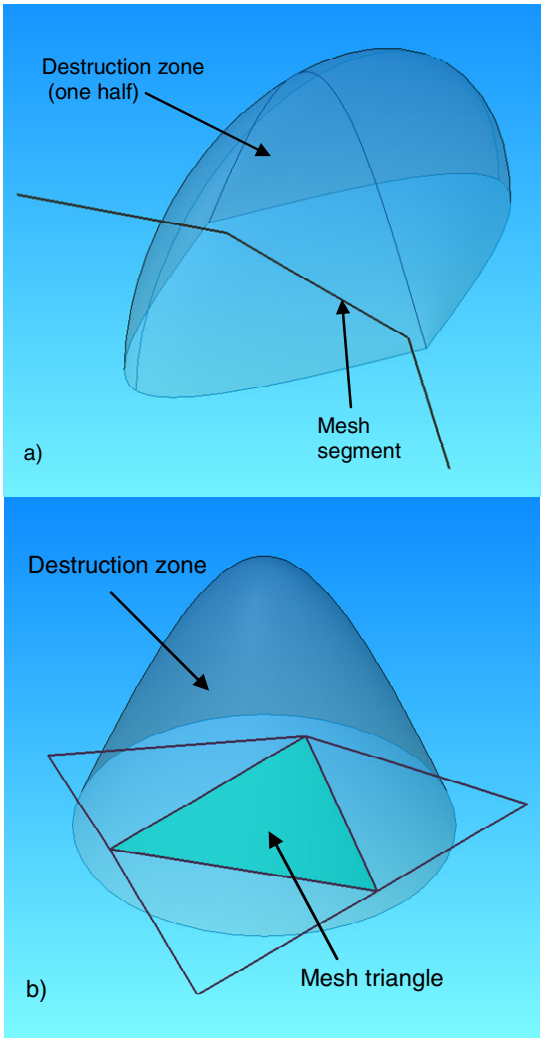

Fig. 7. Destruction zone a) for a mesh segment; b) for a mesh triangle.

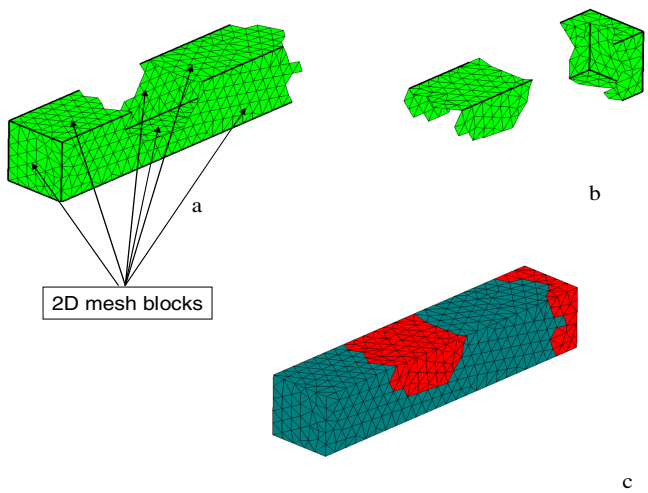

Fig. 8. a) 2D mesh blocks; b) faces mesh processed; c) face mesh processed with face mesh recovered.

9. Tetrahedrons of the initial mesh with a node located inside a zone (Fig. 7b) defined around triangles created at step 5 are destroyed. Here again, the shape of this destruction zone is derived from a parabola with height L as defined at step 3 (Fig. 7b). This shape is different from those used at step 6 (for segments) and has also been designed so that a minimum number of tetrahedrons are destroyed and the convergence of advancing front automatic mesh generation is guaranteed.
10. 3D mesh blocks (tetrahedrons) inside the volume are created (Fig. 9a).
11. In the BREP structure, a volume is either without elements, completely meshed or partially meshed. The same adaptation of standard procedures is also necessary for partially meshed volumes (Fig. 9b). The initialization front of our advancing front mesh generator is adapted. The front is initialized on the boundaries of tetrahedrons belonging to partially meshed volumes. The advancing front mesh generator is then used to obtain the entire volume's mesh (Fig. 9c). Mesh blocks that cannot be inserted inside the modified model are eliminated.

This last step has also been adapted from our previous work on automatic remeshing. The convergence of the remeshing process is improved because the destruction of tetrahedrons inherent to 3D advancing front mesh generation itself is coupled with the destruction of tetrahedrons performed at step 9 of the remeshing algorithm. Thus, convergence of the 3D advancing front process, which is a very sensitive problem, is achieved using a smaller value for parameter L. These

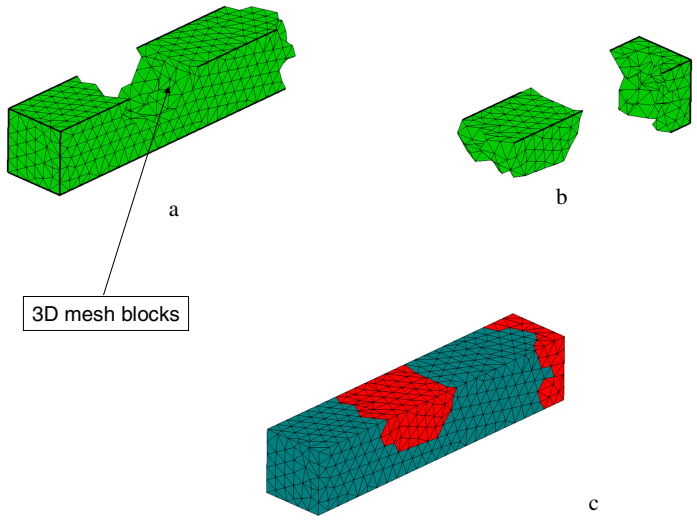

Fig. 9. a) 3D mesh blocks; b) volume mesh processed; c) volume mesh processed with volume mesh recovered.

results in improved efficiency of the remeshing since a larger number of initial tetrahedrons are retrieved.

The implementation of the remeshing process is made simpler by the fact that the majority of operations used here are the same as those used for meshing the initial solid. The efficiency (reduced CPU time) of the remeshing strategy is directly related to the importance and number of modification zones.

The finite elements fall into two categories:

- tetrahedrons retrieved from the mesh of the initial model.
- new tetrahedrons created by the remeshing procedure.

The procedure also generates a table of corresponding nodes in the initial and modified meshes.

3.2 Results

In Fig. 10 to Fig. 12, results of the comparison of BREP models and automatic remeshing are presented for three mechanical parts, to illustrate the method's potential. Matching results for initial and modified parts are once again identified using colour conventions. The colour of the triangular mesh indicates whether the face is identical, localized identical and/or partially modified. Black indicates that the face is erased or new. For each example, illustrations of elements that have been retrieved from the initial mesh, as well as elements that have been newly generated on the modified model, are provided.

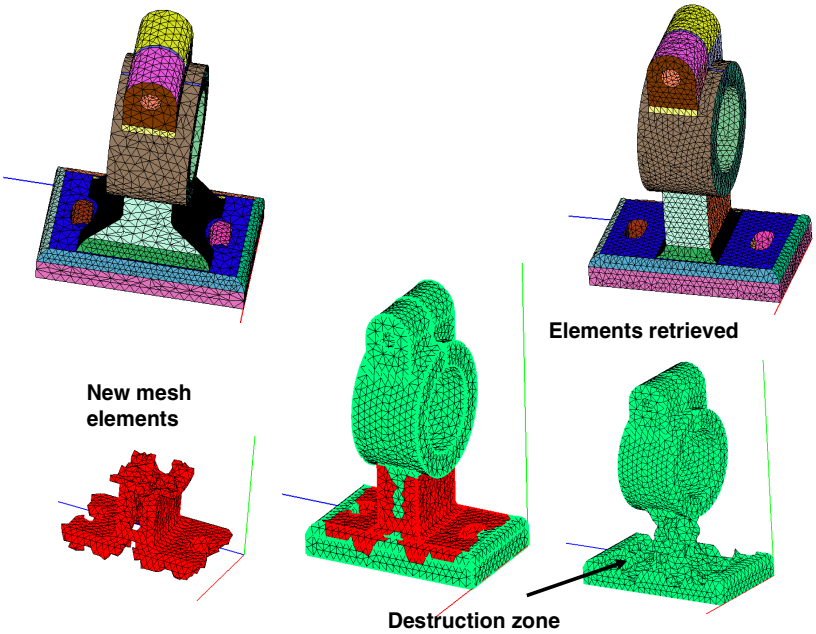

Fig. 10. Remeshing example 1

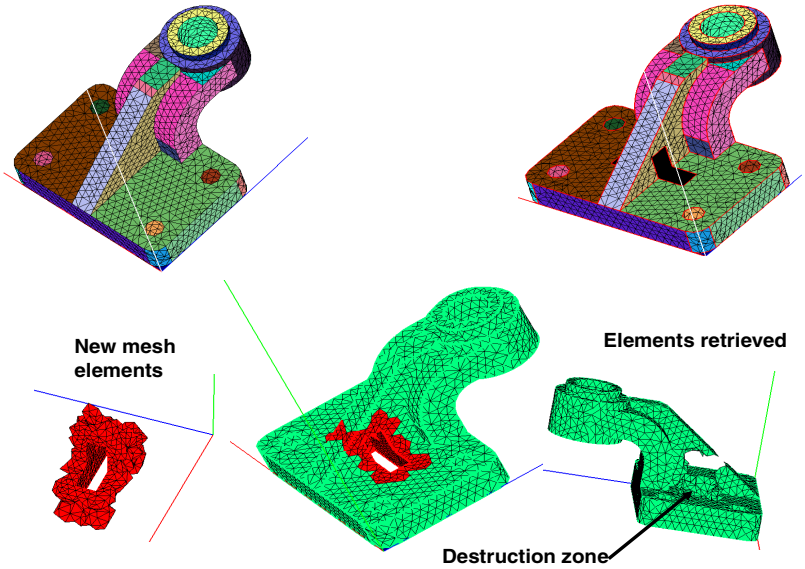

Fig. 11. Remeshing example 2

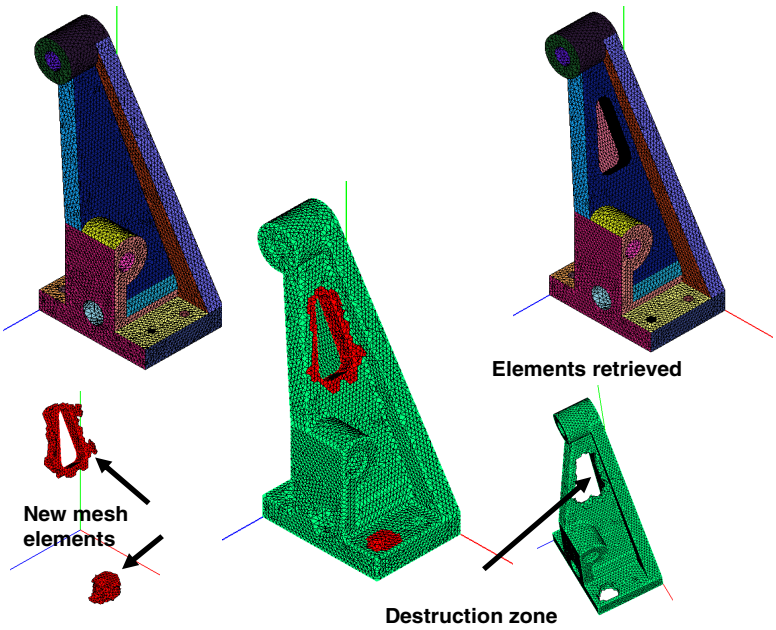

Fig. 12. Remeshing example 3

4 Conclusion

The design process typically involves many iterations of an initial design solution, which may be analyzed and refined numerous times. In this context, there is a need for tools allowing for the fast and efficient retrieval of results obtained in previous analyses at any stage of the design process. In this paper, we have presented a tool that automates the retrieval of modifications between different versions of a design, and the use of this information to automate the retrieval of finite elements between different versions of the analysis of a design. The automatic retrieval of FEA results between different versions of the analysis of a design is still an ongoing research.

Acknowledgments

This study was carried out as part of a project supported by research funding from the Quebec Nature and Technology Research Fund and the Natural Sciences and Engineering Research Council of Canada (NSERC).

References

[1] Iyer, N., Jayanti, S., Lou, K., Kalyanaraman, Y., Ramani, K.: Three-dimensional shape searching: state-of-the-art review and future trends. Computer-Aided Design 37(5), 509–530 (2005)

[2] Cardone, A., Gupta, S.K., Karnik, M.: A Survey of Shape Similarity Assessment Algorithms for Product Design and Manufacturing Applications. Journal of Computing and Information Science in Engineering 3(2), 109–118 (2003)
[3] Hong, T., Lee, K., Kim, S., Chu, C., Lee, H.: Similarity comparison of mechanical parts. Computer-Aided Design and Application 2(6), 759–768 (2005)
[4] Hilaga, M., Shinagawa, Y., Kohmura, T., Kunii, T.L.: Topology Matching for Fully Automatic Similarity Estimation of 3D Shapes. In: SIGGRAPH 2001, Los Angeles (2001)
[5] Osada, R., Funkhouser, T.A., Chazelle, B., Dobkin, D.P.: Matching 3D Models with Shape Distributions. In: Shape Modeling International. IEEE Computer Society Press, Los Alamitos (2001)
[6] Ohbuchi, R., Minamitani, T., Takei, T.: Shape-Similarity Search of 3D Models by using Enhanced Shape Functions. In: TPCG (2003)
[7] Saupe, D., Vranic, D.V.: 3D model retrieval with spherical harmonics and moments. In: Radig, B., Florczyk, S. (eds.) DAGM 2001. LNCS, vol. 2191, p. 392. Springer, Heidelberg (2001)
[8] Cicirello, V.A., Regli, W.C.: Machining Feature-Based Comparisons of Mechanical Parts. In: Shape Modeling International (2001)
[9] Ramesh, M., Yip-Hoi, D., Dutta, D.: Feature Based Shape Similarity Measurement for Retrieval of Mechanical Parts. Journal of Computing and Information Science in Engineering 1(3), 245–257 (2001)
[10] Francois, V., Cuilliere, J.-C.: 3D Automatic remeshing applied to model modification. Computer Aided Design 32(7), 433–444 (2000)
[11] Serre, P., Riviere, A., Clement, A.: Geometric Product Specification and Verification: Integration of Functionality. In: Analysis of fonctional geometrical specification, pp. 115–125. Kluwer, Dordrecht (2003)
[12] Mortenson, M.E.: Geometric Modeling (1985)
[13] Souaissa, K., Hadjsalah, H., Benamara, A., Cuillière, J.C., Francois, V.: Outil de recherche de formes CAO identiques. In: CSME 2008, Ottawa (2008)
[14] Serre, P., Riviere, A., Clement, A.: The clearence effect for assemblability of overcontrained mechanism. In: 8th CIRPP International Seminar on Computer Aided Tolerancing, Charlotte, USA (2003)
[15] Clement, A., Riviere, A., Serre, P., Valade, C.: The TTRS: 13 Constraints for Dimensionning and Tolerancing. In: 5th CIRPP International Seminar on Computer Aided Tolerancing, Toronto, Canada (1997)
[16] Piegl, L.A., Tiller, W.: The NURBS book (1997)
[17] Francois, V., Cuilliere, J.-C.: An a priori adaptive 3D advancing front mesh generator integrated to solid modeling. In: Recent Advances in Integrated Design and Manufacturing in Mechanical Engineering, pp. 337–346 (2003)
[18] Francois, V., Cuilliere, J.-C.: Automatic mesh pre-optimization based on the geometric discretization error. Advances in Engineering Software 31(10), 763–774 (2000)