Rapid Meshing of Turbomachinery Rows Using Semi-Unstructured Conformal Grids

Manuel A. Burgos[2], Roque Corral[1 3], Jaime Fernández-Castañeda[1], and Carlos López[1]

[1] Industria de Turbo Propulsores S.A.,
[2] Universidad Politécnica de Cartagena
[3] Universidad Politécnica de Madrid

Summary. A semi-unstructured grid generation method especially taylored for the meshing of turbomachinery blade passages and their associated cavities is presented. The method is based on a smart combination of quasi-3D methods, an ad-hoc block decomposition of the domain and a grid-based reconstruction of the computational domain.

Key words: Grid, Hybrid, Delaunay, Semi-Unstructured, Turbomachinery

Introduction

The aerodynamic design of uncooled turbomachinery rows is based, among other things, on the repeated simulation of three-dimensional blade rows with a fast turn-around time. Traditionally blade rows have been simulated using clean aerodynamic surfaces and simplified computational domains consisting of just the aerodynamic surface and an approximated main annulus. A more accurate and realistic representation of the flow geometry would require the inclusion of the tip-shroud and under platform cavities, the airfoil platforms themselves and the sealing flows, which on the other hand have been shown to have a large influence on the development of secondary flows (see Figs. 1 and 2).

The motivation for addressing this specific topic is two-fold. First, the computational resources have traditionally limited the overall number of grid points in the simulations and hence their level of complexity. Second, and more important, the efficient setting of turbomachinery simulations has been traditionally a problem, which is aggravated by the presence of tip-shroud and platform cavities.

The steady growth of computational resources has paved the way to overnight simulations of blade rows including its cavities with a small number of CPUs, however if these simulations have to be included in a design process, the generation of the associated grids need to be performed in the order of tens of minutes or at most a few hours.

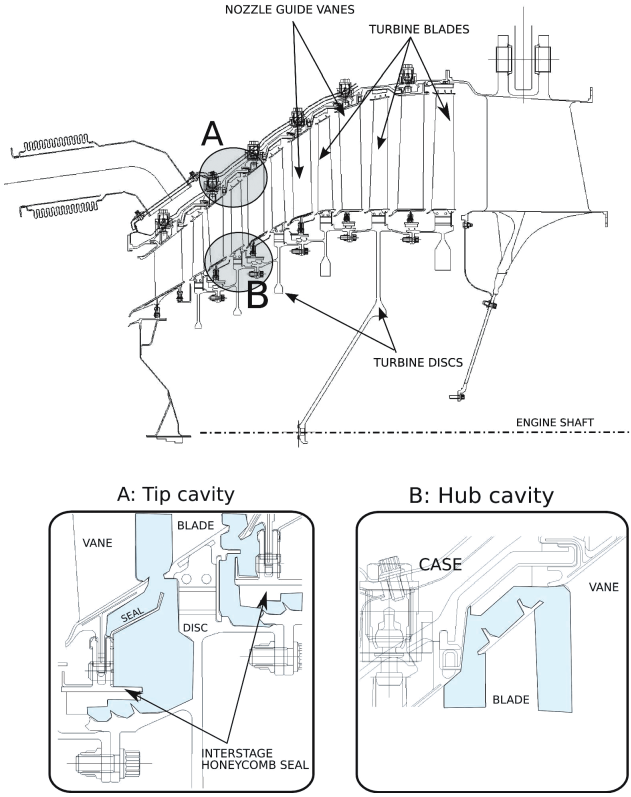

Fig. 1. Real geometry and turbine terminology.

Configurations as the one outlined in Fig. 3 may be meshed using multi-block structured methods. The departing point is usually a CAD 2D drafting model that do not define the fluid domain. The solid model is usually constructed by another specialist and many details, usually irrelevant from a fluid dynamics point of view, are included on it. Obtaining a proper mesh for such configurations may be a one-week task.

Multi-block structured meshing requires to accommodate the geometry in the block interfaces to concentrate nodes in high gradient regions and determine the block topology. The whole process is very slow and not suitable in a design environment.

The use of fully unstructured methods presents several problems as well. The airfoil surface has a large curvature in the leading edge region in the downstream direction, while in the span-wise direction the curvature is much smaller. The meshing process is slow, not reliable enough and tends to generate more nodes than necessary in the radial direction.

The generation of fast and robust *ad hoc* methods for this type of configurations is hence very attractive.

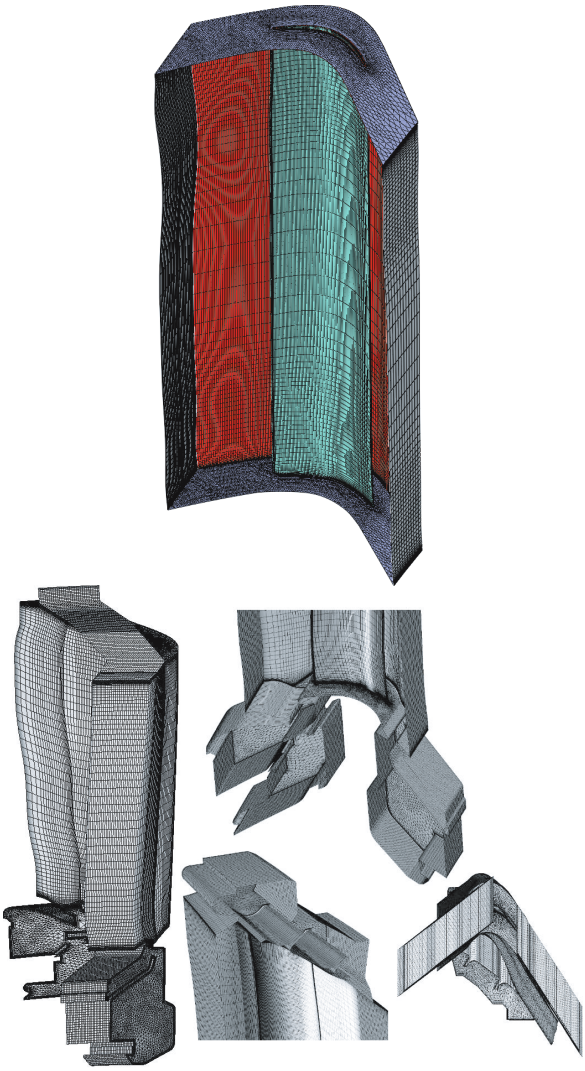

Fig. 2. Traditional design grids (top) and new grids (bottom).

Method Overview

The method exploits several particularities of the configuration to significantly ease, not only the meshing procedure, but the post-processing of the simulations. First the computational domain is conceptually subdivided in sub-domains as it is sketched in Fig. 4 left. However the 3D solid model is not strictly needed and the grid is constructed making extensive use of the freedom that provides the periodicity condition in the azimuthal direction and the use of semi-structured grids.

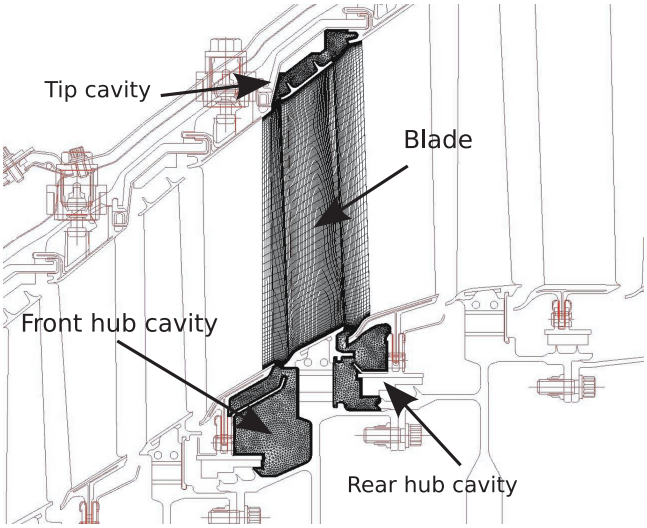

Fig. 3. General arrangement of a turbo-machine and grid of the computational domain

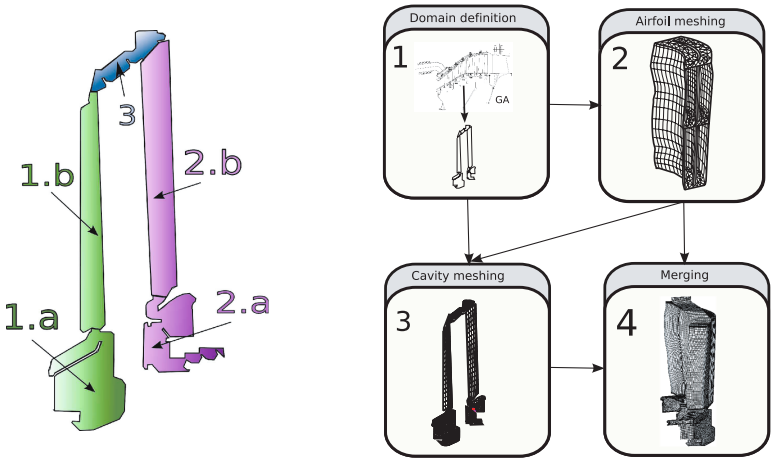

Fig. 4. Conceptual block decomposition (left) and scheme of the meshing process (right)

It is important to highlight that the only truly three-dimensional feature in the domain is the blade airfoil. The tip-shroud cavity and the under-platform cavities are essentially axi-symmetric configurations where the azimuthal position of the lateral boundaries is free, provided that the blade pitch is covered, and do not need to be fixed in advance. Both parts may be meshed using semi-unstructured methods. The unstructured part of the method copes with the more complex part of the geometry (e.g.: The definition of the cavity in the meridional plane) while the structured part deals with the easiest part of the meshing process (e.g: in the cavity the 3D mesh is

obtained revolving the 2D unstructured grid). The difficult part of the problem is to combine all the blocks in a consistent way without generating non-conformal grids and satisfying the designer's requirements in terms of point distribution.

The method considers two types of geometry. The airfoil surface that is created by a specific application and that will be considered given in this work, and the two dimensional geometry, that defines the cavities and the inlet/outlet boundary conditions, and whose revolution defines the computational domain that contains the blade surface. The latter is usually constructed in a CAD environment and need to be cleaned to eliminate details which are not relevant for the simulations.

The method needs to handle information coming from different sources. In order to integrate the process in a design environment a specific application has been developed to keep track of all the information and control the different interfaces. Turbomachinery design is conducted in a hierarchical way and this philosophy has been kept in the actual process.

First a semi-unstructured grid about the airfoil is generated using a system especially designed for the meshing of blade passages that is currently used routinely[1]. This method produces hexahedral and prismatic cells that are easy to merge with revolved two-dimensional grids. The sub-domain is shorter than the one used in the absence of cavities, which spans from the trailing edge of the previous row to the leading edge of the next (see Fig. 3). The inlet and outlet angles are obtained from through-flow data (meridional analysis).

In second place the cavity sub-domains are defined and meshed using hybrid grids. Then the rest of the blade passage is meshed using a structured grid. Especial care has to be taken to ensure the compatibility of the node distribution of this mesh with the airfoil and cavity grids.

Finally the 2D grids are revolved and the resulting grid merged with the semi-unstructured grid of the airfoil. A design environment has been developed, which manages all information, ensures the compatibility of the grids, merges them automatically and creates boundary conditions and consistent initial flow solution.

Geometry Generation

A state-of-the-art turbomachinery design environment must deal with complex configurations and build simulation models in just a few hours. To obtain this objective, a trade off between generic and tuned tools to speed-up the overall process is mandatory. In the context of the present work, all final simulation models are three-dimensional, although advantage is taken, whenever it is possible, of the quasi-axisymmetric nature of the problem.

A CAD-like geometric kernel is used to support all the geometry translation, creation and manipulation, as well as the grid generation. The underlying entities supporting all the geometry are Non-Uniform Rational B-Splines (NURBS) and the solid model topological data structure is a Radial Edge Non-Manifold Boundary Representation (RENM B-Rep).

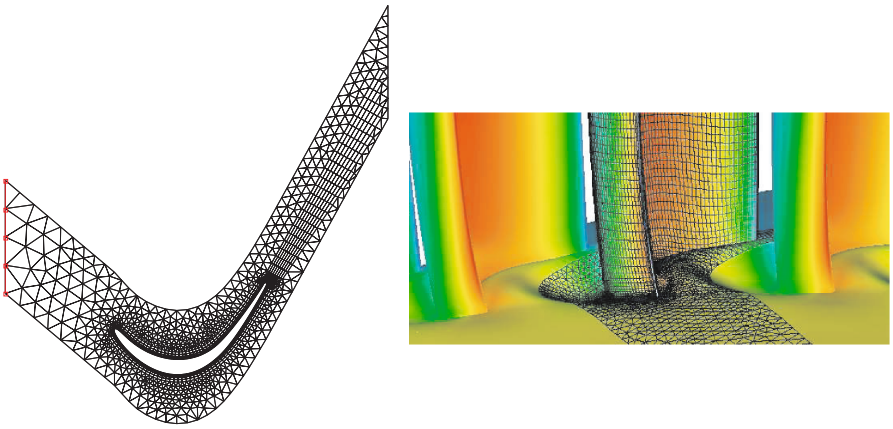

Fig. 5. Hybrid grid on an airfoil (left) and semi-structured grid with a profiled end-wall detail (right)

Passage and Cavities

Including the cavities in the simulation increases significantly the amount of information needed to set up the grid. The cavities are complex and are defined in a CAD tool, together with the rest of the engine, by a designer. The general arrangement (GA) contains usually more information that required including a higher level of details than needed for the simulations, drafting information, other layers, etc.

The GA is imported as an IGES file. The micro-edges are eliminated and the geometry cleaned, which is more efficient than redraw the full geometry. If needed this can be redesign within the same environment. At this point it is possible to decide how to subdivide the domain in blocks. Three blocks are necessary for the latter merging (see Fig. 4) but it is recommended to subdivide into sub-blocks to improve the quality of the grid (meshing zones 1.b and 2.b with structured grids).

Aerodynamic Surfaces

The airfoil surface is provided by the aerodynamic designer and is considered as given in the present work. The baseline computation considers the end-wall as an smooth axi-symmetric surface. The real platform geometries considered here require a modification of the baseline flow-path since it presents discontinuities (gaps) with the rest of the passage end-wall. This problem is illustrated in Fig. 7. When non-axisymmetric end-wall (NAEs) are considered to reduce secondary losses (see Fig. 5, right) the geometry is considered given as well, the main reference with the previous case is that this surface is continuous with respect the baseline axi-symmetric end-wall.

Meshing Techniques

Two-Dimensional Unstructured Triangulation

The computational domain of some blocks (i.e. 1.a and 2.a and 3 in figure 4) and a reference section of the blade grid is tessellated using Delaunay triangulations. Some approaches emphasise constructions based on edge swappings (Lawson's algorithm), whereas others rely on the in-circle property (Bowyer-Watson method). The present algorithm makes use of both methods to increase the robustness of the system. Enforcing the prescribed geometry is usually done in two post-processing steps. First, the edges that define the geometry are required to exist. In the present approach an arbitrary set of edges, not necessarily conforming to a boundary, is forced to exist by executing a sequence of swappings [2]. In a second step, all of the triangles placed outside of the domain are flagged and removed, making use of the orientation associated to the closed circuits that define them and of a consistent ordering of the nodes that constitute the triangles.

Interior nodes of the domain are inserted making use of a function that provides a measure of the desired size of the triangles [3]. This element-size function is built just from the information contained in the point distribution of the domain boundaries and of the prescribed curves in its interior. The key idea of the procedure is to use as field point distribution function the solution of a Laplace equation with Dirichlet boundary conditions.

Mesh quality is improved in two different steps: grid smoothing and node-degree homogenisation. The latter process is useful to break some topological structures that tend to appear during the course of the triangulation and that prevent further improvement of the grid. The original two-dimensional procedure was generalised in order to obtain grids on arbitrary surfaces [4]. To reduce the computational time of edge-based solvers and increase the grid quality, triangles may be converted in an unstructured grid of quads [5].

Two-Dimensional Unstructured Viscous Grid

Grids with high-aspect-ratio cells are generated using an advancing normal technique [6] to build layers of stretched quadrilaterals in the boundary layer and wake regions. Normals are advanced from the selected boundaries where a distribution of points is assigned to each boundary node. Once a layer of normals has been constructed the normal directions are smoothed to improve the quality of the grid. Each single normal may be prevented from growing if either the associated cell reach an aspect ratio close to a certain threshold, usually of order unity, or another node or edge is found in the advancing direction.

Two-Dimensional Structured Grid

Some blocks (i.e 1.b and 2.b in figure 4) of our problem are meshed using structured grids based on the solution of elliptic partial differential equations (PDEs). Forcing

terms are used to construct stretched layers of the cells close to the domain boundaries. Control functions are computed using the boundary point spacing and then interpolated to the inner points [8][9]. The forcing terms are computed as

$$P = -\frac{\frac{\partial \mathbf{r}}{\partial \xi}\frac{\partial^2 \mathbf{r}}{\partial \xi^2}}{\left|\frac{\partial \mathbf{r}}{\partial \xi}\right|^2} \qquad Q = \frac{\frac{\partial \mathbf{r}}{\partial \eta}\frac{\partial^2 \mathbf{r}}{\partial \eta^2}}{\left|\frac{\partial \mathbf{r}}{\partial \eta}\right|^2}$$

Once P and Q are obtained at each boundary the values for the inner points are obtained interpolating along lines of constant ξ and η:

$$P(\xi,\eta) = (1-\eta)P_1(\xi) + \eta P_2(\xi) \qquad 0 \le \xi \le 1$$

$$Q(\xi,\eta) = (1-\xi)Q_1(\eta) + \xi Q_2(\eta) \qquad 0 \le \eta \le 1$$

Grid control of orthogonality at boundaries is introduced adding a second term in P and Q,

$$P = -\frac{\frac{\partial \mathbf{r}}{\partial \xi}\frac{\partial^2 \mathbf{r}}{\partial \xi^2}}{\left|\frac{\partial \mathbf{r}}{\partial \xi}\right|^2} - \lambda\frac{\frac{\partial \mathbf{r}}{\partial \xi}\frac{\partial^2 \mathbf{r}}{\partial \eta^2}}{\left|\frac{\partial \mathbf{r}}{\partial \eta}\right|^2} \qquad Q = \frac{\frac{\partial \mathbf{r}}{\partial \eta}\frac{\partial^2 \mathbf{r}}{\partial \eta^2}}{\left|\frac{\partial \mathbf{r}}{\partial \eta}\right|^2} - \lambda\frac{\frac{\partial \mathbf{r}}{\partial \eta}\frac{\partial^2 \mathbf{r}}{\partial \xi^2}}{\left|\frac{\partial \mathbf{r}}{\partial \xi}\right|^2}$$

where $0 < \lambda < 1$ is a factor that relaxes the orthogonality at the boundaries. It has been observed that the range $\lambda \in$[0.4-0.7] produces optimal results for our configurations.

The elliptic PDEs are solved using a multi-grid method and the smoother is based on a point-wise Newton solver. When the forcing terms are used the convergence of the algorithm deteriorates slightly.

Grid Topology Model

An efficient data structure was implemented to support the grid generation process in geometrical complex models. Solid models are stored in a Radial Edge Non-Manifold (RENM) data structure and numerical grid entities are stored in a Grid Topology Model (GTM) [7]. The GTM data structure explicitly defines the adjacency between grid entities, abstracts the grid from the geometry, eliminates duplicated grid points and provides surface direction normalisation for grid generation.

Grid Generation Methology

Airfoil Passage Meshing

A semi-unstructured grid generation system was specially designed for the meshing of blade passages [1]. The main idea is to build an hybrid two-dimensional grid

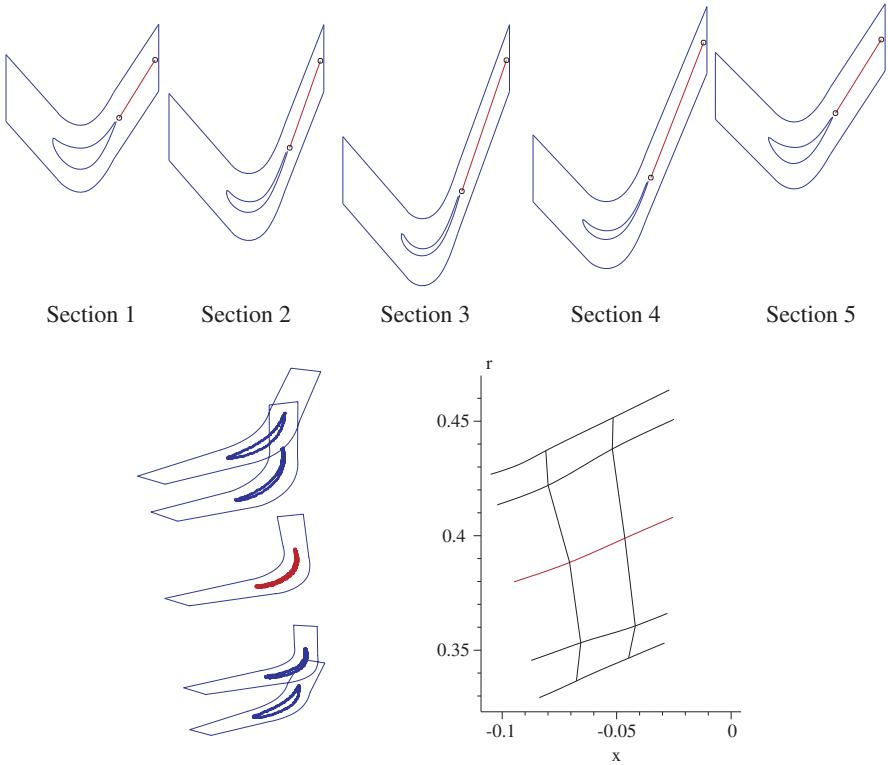

Fig. 6. Two-dimensional domains and data required for the generation of a semi-unstructured grid

for a reference blade-to-blade section and generate a continuous mapping from that section to the rest, keeping the same topology. Then, the triangles and quadrangles of the adjacent sections are connected to form triangular prisms and hexahedra.

The process is fast and robust and the quality of the resulting grid easy to monitor by inspecting each of the sections. The current approach uses the NURBS definition of the blade surface, the boundary conditions of the row and the streamlines from a through-flow program. The first step is to select the number and distribution of radial sections. Typically, sections are clustered in the hub and tip regions to provide adequate resolution of the end-wall boundary layers and the cores of the secondary vortex system. Once the blade sections have been fixed, the intersections of the NURBS definition of the blade and the stream-surfaces associated at each streamline are computed and stored. Simultaneously, the passage of each section is automatically computed. Then, one of the sections is chosen as the reference section and an hybrid grid is constructed in the $m' - \theta$ plane[4] of the corresponding stream-surface.

[4]Parameter m' is definded as follows:

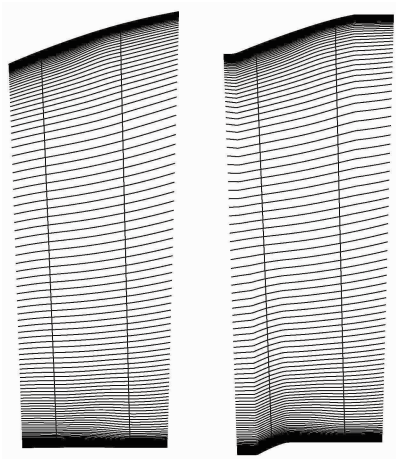

Fig. 7. Modification of the baseline geometry to introduce platform geometry and profield end-walls.

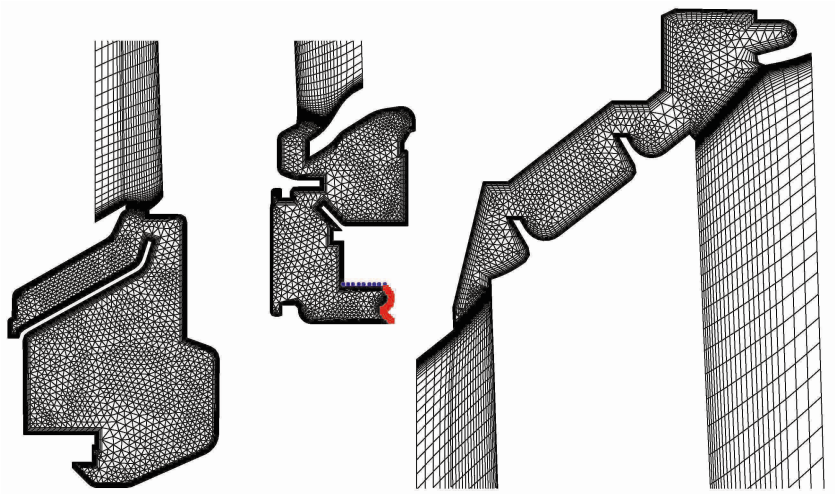

Fig. 8. Close-up of the 2D hybrid grids in the Cavities

At this stage the homologous points of the current section are selected, the existing 2D grid mapped to the rest of the section and a three-dimensional connectivity defined (see Fig. 6).

$$m'(x) = \int_{x_0}^{x} \frac{ds}{r} = \int_{x_0}^{x} \frac{\sqrt{1+(r'(x))^2}}{r(x)} dx$$

where x is the axial axis of the engine. This parameterization is used in turbomachinery to deal with 2D CFD simulations on stream-surfaces due its properties i.e., preserves angles, is non-dimensional and locally length-coherent...

Non axi-symmetric end-walls and platform profiles are introduced as perturbations of the axi-symmetric nominal tip and hub stream-surfaces defined by the trough-flow analysis. The perturbations are gradually damped away from the walls until an axi-symmetric stream-surface is recovered.

When the cavities are included the length of the passage meshed by this method is reduced to an arbitrary distance from the blade contained within the upper and lower platforms.

Cavity Meshing

Cavities are meshed in the (x,r) plane using hybrid grids. Stretched layers in the vicinity of the wall are constructed using an advancing layer method and revolved later for merging. Node distribution of the passage in platform gap region is forced to be the same as the one of the cavity.

To generate a high quality mesh, the rest of the passage is meshed using a structured grid for which it is necessary to generate a block.. Continuity of the streched cells in the blade passage block has to be provided here (see fig. 8). The cavities themselves are usually meshed using hybrid grids, thus, blocks 1.a and 2.a have structured grid and blocks 1.b, 3 and 2.b have hybrid grids (see Fig. 4). Triangles and quadrilaterals are transformed in hexahedral and primatic cells respectively upon revolution, although the possibility of building an structured 2D multi-blocks grid remains for blocks 1.a, 2.a and 3 (but user will spend more time).

Merging

Once the 3D blade passage grid and the 2D cavity grid have been generated (see Fig. 9 left), the latter has to be revolved to form a 3D grid and then merged with the former.

The grid of the cavity is defined in the (x,r) plane and the inlet and outlet planes of the blade passage grid have a unique projection in the (x,r) plane defined by $r_b(x)$ and an arbitrary distribution of nodes in the azimuthal direction, although in practice, at the inlet the nodes are distributed uniformly in the azimuthal direction, while at the outlet a node clustering is typically seen in the middle of the passage to increase the definition in the wake region.

The creation of a conformal high-quality grid requires a point-wise definition of the extrusion of the 2D grid. To begin with we assume a reference angle θ_0 and a variation of the origin for each radial section $\theta_0 + \alpha_1(r)$ (see Fig. 9 right). Then the azimuthal variation in the passage is represented by θ_j. If the distribution were uniform $\theta_j = (j-1)\Delta\theta$ with $\Delta\theta = \text{Blade Pitch}/(N_\theta - 1)$ where N_θ is the number of points in the azimuthal direction. The azimuthal angle in the interface plane is then

$$\theta_j(x_I) = \theta_0 + \alpha_1(r) + \theta_j.$$

The azimuthal position of the nodes is further modified to aligned the grid located in the main annulus with the flow as it is sketched in Fig. 10 where the 2D revolved

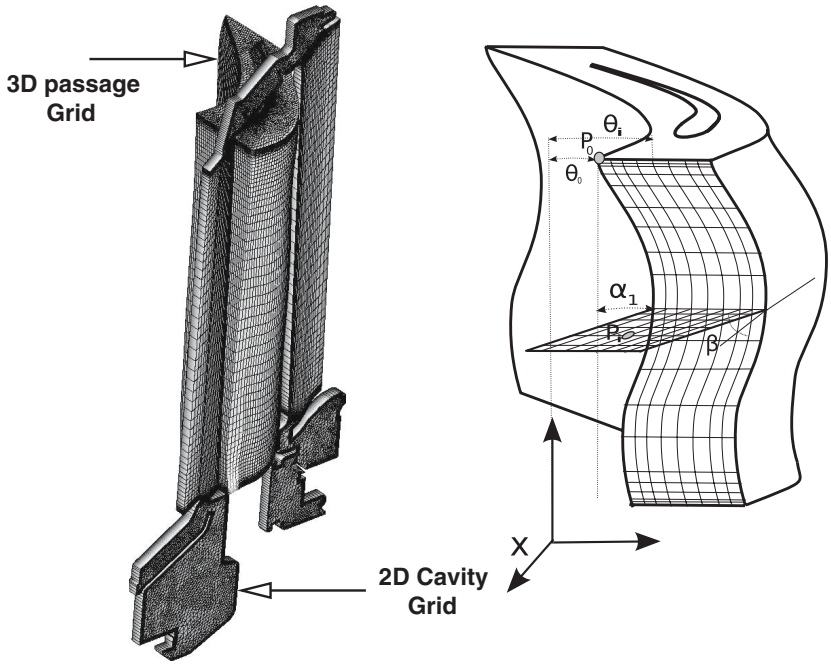

Fig. 9. Description of the merging problem (left) and adaption of the extruded 2D grid to the 3D grid (right)

grid is depicted. The azimuthal position of the extruded grid taking into account this feature is then

$$\theta(x,r) = \theta(x_I) + \frac{x - x_I}{r} \tan\beta$$

Once all the grids have been created are merged in a single grid, all the duplicated nodes are removed. Especial care has to be taken in the boundary layer regions where the grid spacing is very small and the generation of a conformal grid complex.

Preprocessing Environment

To integrate the present method in a design environment it was necessary to create a specific tool to manage all the information required, launch specific programs to mesh different blocks, ensure the compatibility among the different blocks and merge them automatically.

Automation of the whole process is possible due to the assignation by the user of attributes to the different geometric entities. This allows to mesh the redesigns reusing the grid parameters of the previous designs.

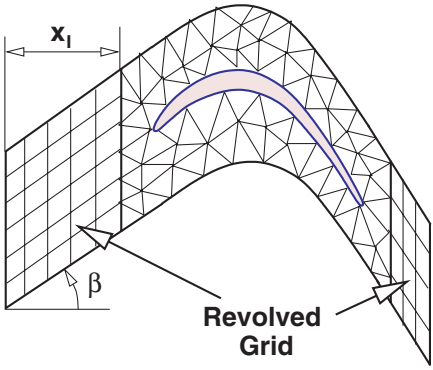

Fig. 10. Sketch of the grid in the main annulus

Initial flow solution and boundary conditions are set-up while meshing the different sub-blocks and transfered to the final grid. To ease the CFD convergence process the environment also handles the interpolation of the flow solution from other simulations, with or without cavities.

The main idea is to perform the whole work is a single environment that guides the user to set up of the grid and to where all the information is readily available.

Application Examples

The fifth stator of a low-pressure turbine has been chosen to test the capabilities of the method. The same geometry had been previously meshed using a multi-block structured method (see Fig. 11). The main difference between the structured grid and our method (Fig. 12) is due to the propagation of the stretching in the boundary layer region on the cavities and the passage to obtain a conformal grid. These additional points are not only undesirable from a computational point of view but represent a 30% of the total number of points.

Although the tip cavity has not been included in this mesh the number of nodes of the mesh with cavities approximately doubles the one of the single passage (about 1.6×10^6 points). The final grid is not only of better quality, but the time required to set the grid is reduced by one order of magnitude (from one week to a few hours)

Concluding Remarks

A method to set up CFD simulations for turbomachinery rows including its adjacent cavities in a few hours has been presented. The method constructs the grid departing from the general arrangement, the blade surface and the trough-flow data, that contain value data to construct the grid as the inlet and outlet angles.

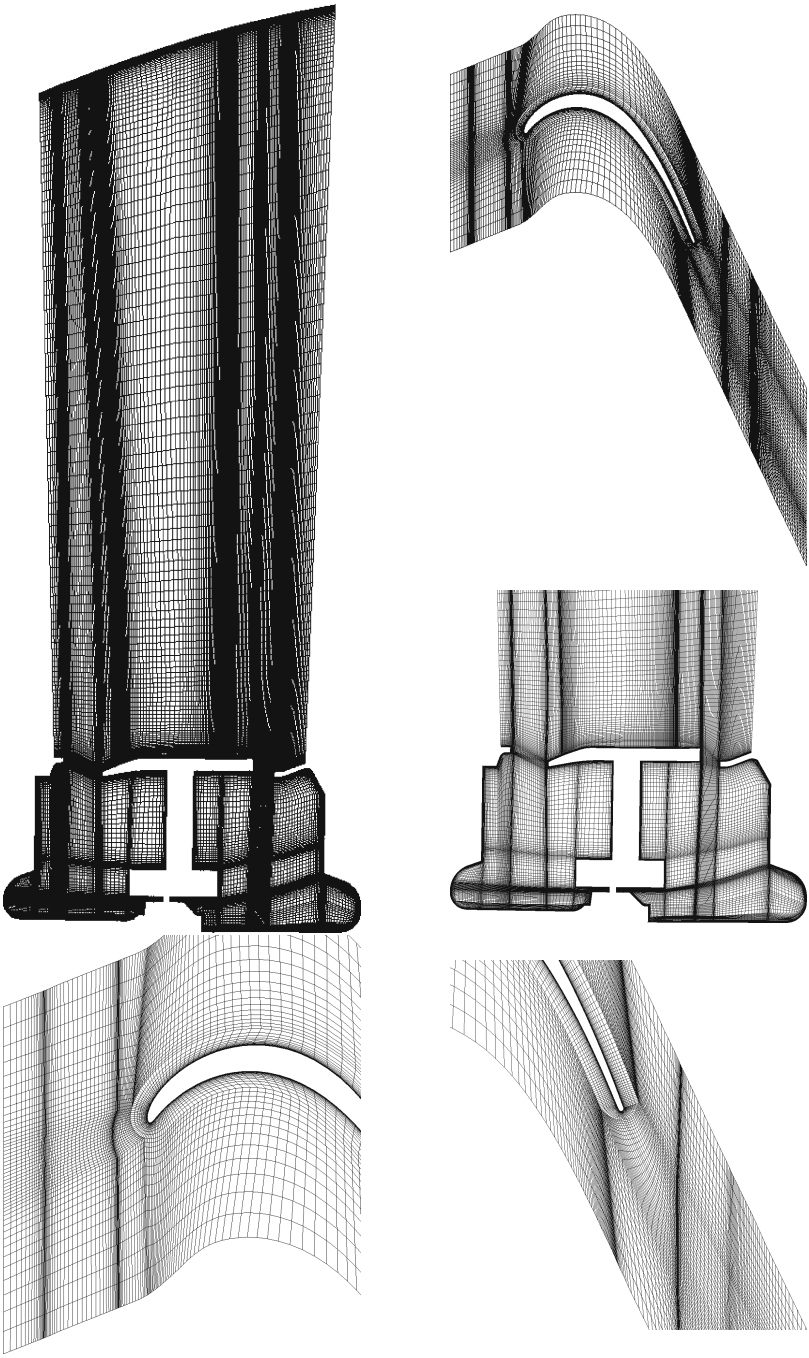

Fig. 11. Multi-block grid of the fifth rotor of the Trent 1000 engine low-pressure turbine (3.8 $\times 10^6$ nodes)

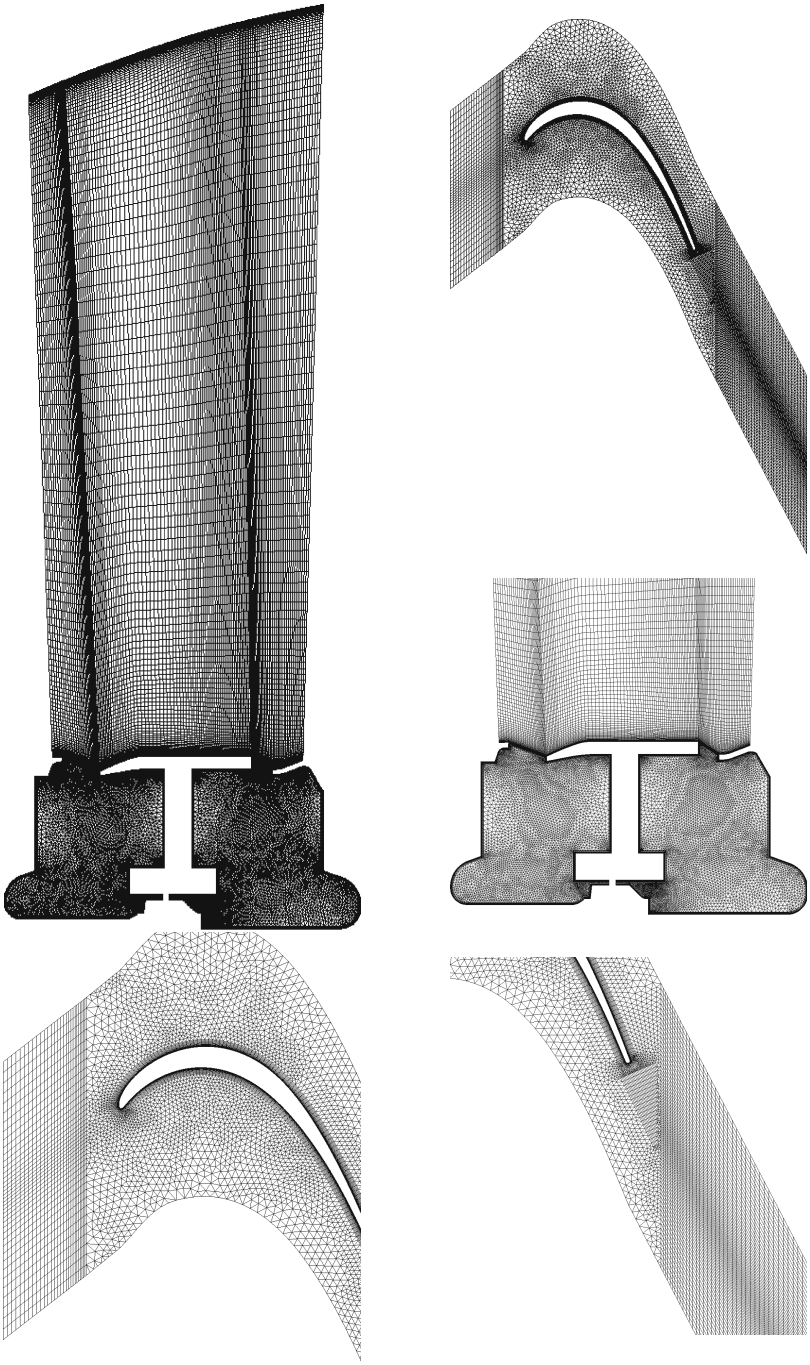

Fig. 12. Semi-structured grid of the fifth rotor of the low-pressure turbine of the Trent 1000 engine (3.0×10^6 nodes)

The current approach constructs the grid without making use a solid model. Instead directly uses the 2D geometry to construct the cavity grids revolving unstructured grids. The blade passage mesh is constructed using as well a 3D semi-structured grid.

Approximately the number of points in the cavities is the same than the number of nodes in the blade passage, however the complexity in the generation of the grid does not increase significantly.

Today the largest limitation of the method consists in the accommodation of the fillets between the blade and the platforms, that are known to significantly impact the development of secondary flows.

References

1. J. Contreras, R. Corral, J. Fernandez-Castañeda, G Pastor and C. Vasco, *Semi-Unstructured Grid Methods for Turbomachinery Applications*, ASME Paper 2002-GT-30572 presented at 47nd ASME Gas Turbine and Aeroengine Congress, Exposition and Users Symposium June 3-6, 2002, Amsterdam, The Netherlands.
2. S.W., Sloan, *A Fast Algorithm for Generating Constrained Delaunay Triangulations*, Computers & Structures, Vol 47, No. 3, pp. 441-450, 1993
3. R. Corral and J. Fernández-Castañeda, *Surface Mesh Generation by Means of Steiner Triangulations*, AIAA paper 98-3013, 1998
4. R. Corral, J. Fernandez-Castañeda, *Surface Mesh Generation by Means of Steiner Triangulations*, AIAA Journal Vol. 39, No. 1, pp. 178-180, 2001
5. S.J. Owen, M.L. Staten, S.A. Canann, S. Saigal, *Q-Morph an Indirect Approach to Advancing Front Quad Meshing*, Int. J. Numer. Meth Enging, Vol 44, 1317-1340, 1999
6. Pirzadeh, S., Unstructured Viscous Grid Generation by the Advancing Layers Method , AIAA Paper 93-3453, 1993
7. A. Gaither, *A Boundary Representation Solid Modelling Data Structure for General Numerical Grid Generation*, Master Thesis, Mississippi State University, 1997
8. Thomas P., and Middlecoff J. *Direct control of the Grid Point Distribution in Meshes Generated by Elliptic Equations*, AIAA Journal Vol. 18, No. 6., 1980
9. Sorenson R. L. and Steger J. L. *Numerical Generation of Two dimensional Grids by the Use of Poisson Equations with Grid Control*, in Numerical Grid Generation Techniques, R. E Smith, ed.. NASA CP 2166, NASA Langley Research Center, Hampton, VA, USA, 1980